MX40 Pro

LED Display Controller

Specifications

Change History

Document Version	Release Date	Description
V1.5.0	2025-09-30	• HDMI 2.0 input supports YCbCr 4:2:0 color sampling format. • Supports central control protocol and viewing of device MAC address. • Supports SPDIF audio output.
V1.4.0	2024-06-13	• Added certification information for KC. • Added the function of synchronous output from optical and Ethernet ports. • Added the function of setting optical port output mode. Users may choose between 20-port mode and 40-port mode. • Supports importing 3D LUT files with an accuracy of 33x33x33 / 65x65x65. • Added information for supported receiving card models.
V1.2.0	2023-01-03	• Added the function of changing the temperature scale. • Added a layer scaling mode: fill screen. • Support the SNMP and Art-Net protocols.
V1.1.0	2022-11-07	• Updated the description of the USB port on the front panel. • Optimized the description of Ethernet port load capacity.

Introduction

The MX40 Pro is a flagship all-in-one LED display controller with 20 Ethernet ports in the brand-new control system COEX series of Xi'an NovaStar Tech Co., Ltd. (hereinafter referred to as NovaStar). This controller integrates video processing and video control into one box and offers rich video input connectors (HDMI 2.0, DP 1.2 and 12G-SDI), 20x Ethernet output ports and 4x 10G optical ports (supports synchronous output). It can also work with the brand new software VMP (Vision Management Platform) to provide a better operation and control experience.

Certifications

CCC, CE, RoHS, FCC, IC, UL, CB, KC, EAC

If the product does not have the relevant certifications required by the countries or regions where it is to be sold, please contact NovaStar to confirm or address the problem. Otherwise, the customer shall be responsible for the legal risks caused or NovaStar has the right to claim compensation.

Features

Inputs and Outputs

- 3 types of inputs
  - 3x HDMI 2.0 (with loop through)
  - 1x DP 1.2
  - 1x 12G-SDI (with loop through)
- 12-bit, 10-bit and 8-bit video inputs
- 3 types of outputs
  - 20x Gigabit Ethernet ports, load capacity up to 9 million pixels
  - 4x 10G optical ports, supporting setting of output mode. Users may choose between 20-port mode and 40-port mode.
  - 1x SPDIF digital audio port
- 3 types of controls
  - 1x Genlock signal input (with loop through)
  - 2x Ethernet control ports
  - 1x Auxiliary port

Advanced Features

- 4 Independent Layers

  Support up to 4x 4K layers and layer priority adjustment in Z order.
- Image Scaling

Each layer supports 4 scaling mode: custom, pixel to pixel, snap to canvas, and fill screen.

- Color Replacement

  Replace any color in the image with another color without affecting other colors. It is recommended to choose color with higher saturation for replacement to achieve better outcome.

- 14Ch Color Correction

  Supports precise adjustment to the hue, saturation, and brightness of black and white, and the12 standard colors derived from the three primary colors (RGB).

- Color Curves

  Supports adjustment to the RGBW mapping curves of the screen.

- 3D LUT

  Use the 3D LUT file (.cube) with an accuracy of 17×17×17 / 33×33×33 / 65×65×65 to adjust the colors of the video source.

- Dynamic Booster

  Real-time analysis and dynamic adjustment are made to each frame to significantly improve the display contrast and image details for better visual experience, and effectively control and lower the display power consumption, extending the service life of the LED screen.

- Full-Grayscale Calibration

  Work with NovaStar's high-precision calibration system CC3 along with the scientific-grade cameras CC60 and C3200 to generate unique calibration coefficients for each grayscale, ensuring uniformity of each grayscale and dramatically improving the image quality.

- HDR
  - Support HDR10 and comply with the SMPTE ST 2084 and SMPTE ST 2086 standards.
  - Support HLG.

- 3D

  Work with the 3D emitter and 3D glasses to bring a fascinating and immersive 3D viewing experience.

- Latency
  - Different screens can have different latency settings. The minimum processing latency of the LED display controller is reduced to 0-frame (less than 1 ms), achieving low latency without reducing the load.
  - Supports additional latency. Users can choose to add zero to two frames of latency.

- Preset

For optimal display in various scenarios, users can adjust display parameters such as layers, brightness, color temperature, and gamma ahead of time and save them as presets. Users can save up to 128 customizable presets which can be easily applied or switched with just one click.

- No rectangle restriction

  No rectangle restriction for irregular screens. This means when calculating resolutions, blank pixels do not count towards the total capacity. The used load capacity of Ethernet ports is the sum of the resolutions of all cabinets with load.

- Frame Rate Adaptive

  Automatically adapt to video inputs with different frame rates ranging from 23.98 Hz to 480 Hz, and support the automatic calculation of optimal screen parameters based on the input source's frame rate. This ensures that the brightness deviation of the screen remains within 5% across different frame rates. It also supports precise frame rate adjustment in 0.01 Hz increments.

- Shutter Fit

  Automatically adjusts the driver IC parameters according to the camera shutter angle to fix problems of black lines, grayscale addition, and grayscale loss during camera shooting in xR scenarios.

- Frame Multiplication
  - Frame interpolation: Outputs images that are captured from multiple shooting angles with different backgrounds at the same time. Solid green backgrounds can also be inserted to allow for easy post-production adjustments.
  - Frequency multiplication: Supports high frame rates of up to 480 Hz. This feature is to accommodate multi-angle camera shooting to improve the screen performance under the camera.

Device Controls

- VMP software control

  The device can be connected to the VMP software to provide easy and convenient operations and smart device management.

- Supports the SNMP, Art-Net, and central control protocols.
- Cascading control via Ethernet

The Gigabit Ethernet control ports support TCP/IP protocol and star topology. No switch or router is needed to deploy multiple devices on the same LAN via device cascading as the network switching function is already built in.

- Automated system monitoring and alarm

  Hardware monitoring capabilities that encompass fan speed, module temperatures, voltage levels, and operational status. It automatically detects and reports any device faults or alarm information, ensuring real-time monitoring of the LED screen's operational status.

Table 4-1 Function Limitations

Function	Limitation
Frame Rate Adaptive	To use this function, it is required to pair with the A10s Pro and its derivative receiving cards and specific driver ICs (for detailed IC models, please see the product specifications on the NovaStar website at https://www.novastar.tech/). Additionally, you must use the Cabinet Tool provided by NovaStar to adjust the driver IC parameters for different frame rates, which will generate the required NCP file.
Dynamic Booster	It is required to work with the A10s Pro receiving card or its derivatives. Users need to use a CA410-VP427, CA410-P427, or CA410-P427H colorimeter to perform the gamut and brightness correction.
Full Grayscale Calibration	It is required to work with the A10s Pro\A8s Pro receiving card or their derivatives. Users need to use a CC60\C3200 camera to perform full-grayscale calibration.
Calibration Software	COEX V1.5.0 and later versions no longer support the Calcube2.X. Please use the official version of the CC3 calibration software for calibration.
3D	3D cannot be enabled simultaneously with Low Latency and Frame Multiplication. To use the 3D function, specified 3D glasses are needed. For details, please contact NovaStar technical support.
HDR	Supports both automatic parsing and manual settings for HDR. When the input interfaces are HDMI 2.0, HDR10 and HLG are supported. For 12G-SDI, DP 1.2, and non-standard HDR sources, HDR attributes can only be manually overridden.
Low Latency	Low Latency cannot be enabled simultaneously with Genlock, 3D, and Frame Multiplication. Moreover, it is recommended to ensure all Ethernet ports load the cabinets vertically and share the same Y coordinate (all set to 0) when Low Latency is enabled.

Table 4-2 Supported receiving card models

Receiving Card Model	Supported
A10s Pro and its series	Yes
A8s Pro and its series	Yes
A8s and its series	Yes
A8s-N	Yes
A7s Plus	Yes
A5s Plus	Yes
B6s	Yes

Appearance

Front Panel

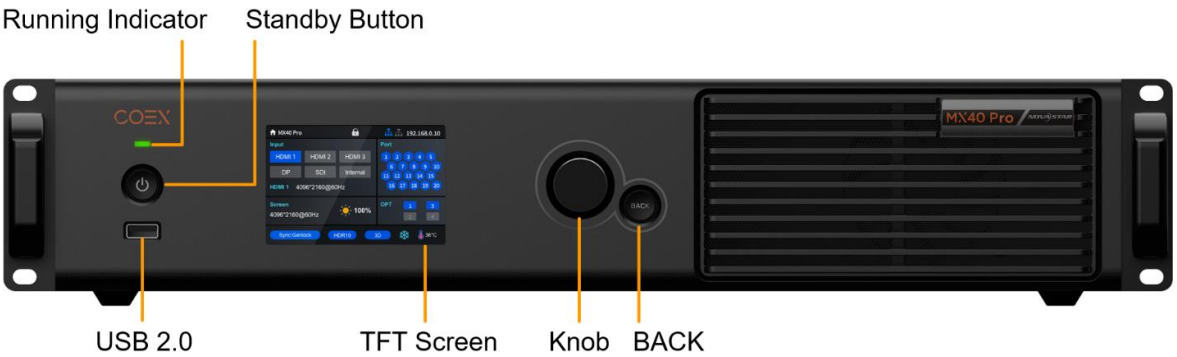

Name	Function
Running indicator	• Solid red: Standby. • Solid blue: The device is being powered on. • Solid green: The device is running normally. • Flashing red: The device is running abnormally.
Standby button	• Press the button to power on or power off the device. • Hold down the button for 5s to 10s to restart the device.
USB 2.0	• Connect to a USB drive only to export the device diagnostic result. • Only the NTFS and FAT32 file systems are supported. Others are not supported.
TFT Screen	A 3.5-inch screen to display the device status, menus, submenus and messages for parameter settings.

Name	Function
Knob	• On the home screen, press the knob to enter the main menu screen. • On the main menu screen, rotate the knob to select a menu item or adjust the parameter value. Press the knob to confirm the operation. • Hold down the knob and **BACK** button simultaneously for 5s or longer to lock or unlock the buttons and screen.
BACK	Go back to the previous menu or cancel the current operation.

Rear Panel

Inputs			
Type	Qty	Description	
HDMI 2.0-1 IN	1	Resolutions	Max resolution: 4096×2160@60Hz/8192×1080@60Hz (Forced) Min resolution: 800×600@60Hz
		Max width/height (Forced)	Max width: 8192 pixels (8192×1080@60Hz) Max height: 8192 pixels (1080×8192@60Hz)
		Frame rates	23.98/24/25/29.97/30/47.95/48/50/59.94/60/71.93/72/75/100/119.88/120/143.86/144/240 Hz
		HDR	Support HDR10 and comply with the SMPTE ST 2084 and SMPTE ST 2086 standards. Support HLG.
		EDID management	Support standard resolutions, up to 3840×2160@60Hz. Support custom input resolutions.
		HDCP	HDCP 2.2 compliant, backwards compatible with HDCP 1.4/HDCP 1.3.
		Interlaced signal inputs	Not supported.
HDMI 2.0-2	1	Resolutions	Max resolution: 4096×2160@60Hz/8192×1080@60Hz

Inputs			
Type	Qty	Description	
IN			(Forced) Min resolution: 800×600@60Hz
		Max width/height (Forced)	Max width: 8192 pixels (8192×1080@60Hz) Max height: 7680 pixels (1080×7680@60Hz)
		Frame rates	23.98/24/25/29.97/30/47.95/48/50/59.94/60/71.93/72/75/100/119.88/120/143.86/144/240 Hz
		HDR	Support HDR10 and comply with the SMPTE ST 2084 and SMPTE ST 2086 standards. Support HLG.
		EDID management	Support standard resolutions, up to 3840×2160@60Hz. Support custom input resolutions.
		HDCP	HDCP 2.2 compliant, backwards compatible with HDCP 1.4/HDCP 1.3.
		Interlaced signal inputs	Not supported.
HDMI 2.0-3 IN	1	Resolutions	Max resolution: 4096×2160@60Hz/8192×1080@60Hz (Forced) Min resolution: 800×600@60Hz
		Max width/height (Forced)	Max width: 8192 pixels (8192×1080@60Hz) Max height: 7680 pixels (1080×7680@60Hz)
		Frame rates	23.98/24/25/29.97/30/47.95/48/50/59.94/60/71.93/72/75/100/119.88/120/143.86/144/240 Hz
		HDR	Support HDR10 and comply with the SMPTE ST 2084 and SMPTE ST 2086 standards. Support HLG.
		EDID management	Support standard resolutions, up to 3840×2160@60Hz. Support custom input resolutions.
		HDCP	HDCP 2.2 compliant, backwards compatible with HDCP 1.4/HDCP 1.3.
		Interlaced signal inputs	Not supported.

Inputs			
Type	Qty	Description	
DP 1.2	1	Resolutions	Max resolution: 4096×2160@60Hz/8192×1080@60Hz (Forced) Min resolution: 800×600@60Hz
		Max width/height (Forced)	Max width: 8192 pixels (8192×1080@60Hz) Max height: 8192 pixels (1080×8192@60Hz)
		Frame rates	23.98/24/25/29.97/30/47.95/48/50/59.94/60/71.93/72/75/100/119.88/120/143.86/144/240 Hz
		EDID management	Support standard resolutions, up to 3840×2160@60Hz. Support custom input resolutions.
		HDCP	HDCP 1.3 compliant.
		Interlaced signal inputs	Not supported.
12G-SDI IN	1	Standards	Support ST-2082 (12G), ST-2081 (6G), ST-424 (3G) and ST-292 (HD) standard video inputs. Support 3G-Level A.
		Resolutions	Max resolution: 4096×2160@60Hz Min resolution: 720×480i@59.94Hz
		Frame rates	23.98/24/25/29.97/30/47.95/48/50/59.94/60 Hz
		Interlaced signal inputs	Support interlaced signal inputs, including 1080i/576i/480i.
		Cables	Recommend using the CANARE-12G SDI coaxial cable. Cables up to 50 meters are supported.
Outputs			
Type	Qty	Description	
1–20	20	Gigabit Ethernet output ports. Support hot backup between Ethernet ports. • Max device load capacity: 9 million pixels • Max output width/height: 16,384 pixels • The maximum load capacity per Ethernet port is as follows. For details, refers to Ethernet Port Load Capacity: – 8bit@60Hz: 659,722 pixels – 10bit@60Hz: 494,791 pixels (available only with the A10s Pro or A8s Pro receiving cards) – 10/12bit@60Hz: 329,861 pixels	

Inputs		
Type	Qty	Description
		Note The load capacity of a single Ethernet port can only achieve its maximum when the load width is 128 pixels or more. If the load width is less than that, the load capacity will be reduced accordingly, calculated as (128 - load width) × load height. When using the Ethernet port, pair it with a CAT5E cable for a maximum length of 100 meters.
OPT 1–4	4	10G optical output ports with a transmission rate of 10.3125 Gbps. Supports setting of output mode. Users may choose between 20-port mode and 40-port mode. • 20-port mode: – OPT 1 transmits the data of Ethernet ports 1 to 10. OPT 3 is the copy channel of OPT 1. – OPT 2 transmits the data of Ethernet ports 11 to 20. OPT 4 is the copy channel of OPT 2. – You can use the optical port alongside the physical Ethernet port, with priority given in the following order: OPT 1/2 > OPT 3/4 > Ethernet ports 1–20. • 40-port mode: – OPT 1 transmits the data of Ethernet ports 1 to 10. – OPT 2 transmits the data of Ethernet ports 11 to 20. – OPT 3 transmits the data of Ethernet ports 21 to 30. – OPT 4 transmits the data of Ethernet ports 31 to 40. – You can use the optical port alongside the physical Ethernet port, with priority given in the following order: OPT 1/2 > Ethernet ports 1–20. Note • The product doesn't include an optical module by default. If you need one, it's recommended to choose a compatible NovaStar product. • When both the optical and Ethernet ports are used simultaneously, please do NOT connect the controller's Ethernet port with the same number as the one of the optical port to the receiving card at the same time. If they are connected simultaneously, the display effect of the optical port will take precedence. • When Ethernet port backup is enabled in 40-port mode, the first 20 Ethernet ports are backed up by the last 20 Ethernet ports. When switching to the 20-port mode, please remember to remove the loop backup setup of the

Inputs		
Type	Qty	Description
		receiving card.
HDMI 2.0-1 LOOP	1	HDMI loop through. Up to 8 devices can be cabled in one loop.
HDMI 2.0-2 LOOP	1	
HDMI 2.0-3 LOOP	1	
12G-SDI LOOP	1	SDI loop through. Up to 8 devices can be cabled in one loop.
SPDIF OUT	1	A digital audio output. You can select one of the connected input sources (HDMI 2.0_2 or HDMI 2.0_3) for audio output.
Controls		
Type	Qty	Description
ETHERNET	2	Gigabit Ethernet control ports. Support TCP/IP protocol and star connection. They have the same functions without priority and order, and can be connected to VMP software and central control devices. No switch or router is needed to deploy multiple devices on the same LAN via device cascading as the network switching function is already built in. Up to 20 MX40 Pro can be cascaded.
GENLOCK	1	A pair of Genlock signal connectors. Support Bi-Level, Tri-Level, and Blackburst. • IN: Accept the sync signal • LOOP: Loop the sync signal The Genlock input signal supports a frame rate range from 23.98 Hz to 60 Hz. For standard Genlock signal generators, up to 20 MX40 Pro can be cascaded.
AUX	1	An auxiliary connector for connecting to central control devices (RS232).
Power		
100-240V~, 50/60Hz	1	An AC power input connector and switch

Note

The maximum input resolution and maximum width and height of HDMI and DP connectors must be obtained by setting the graphics card.

Dimensions

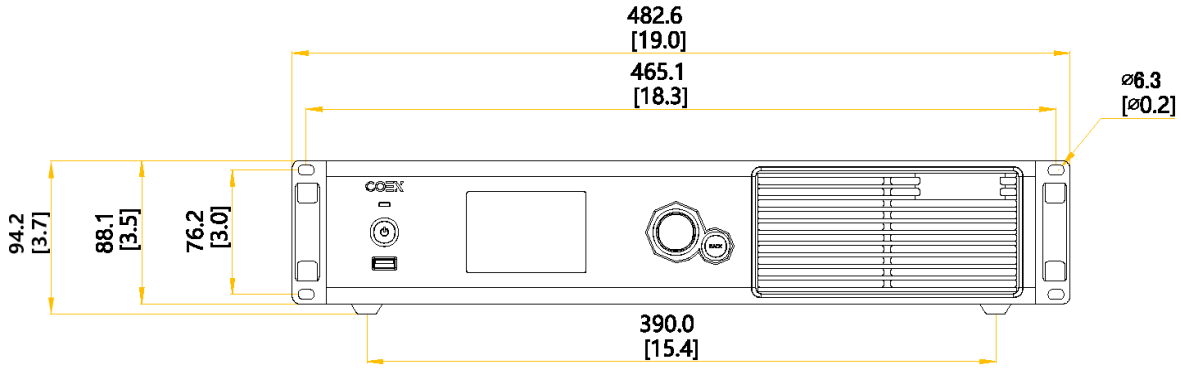

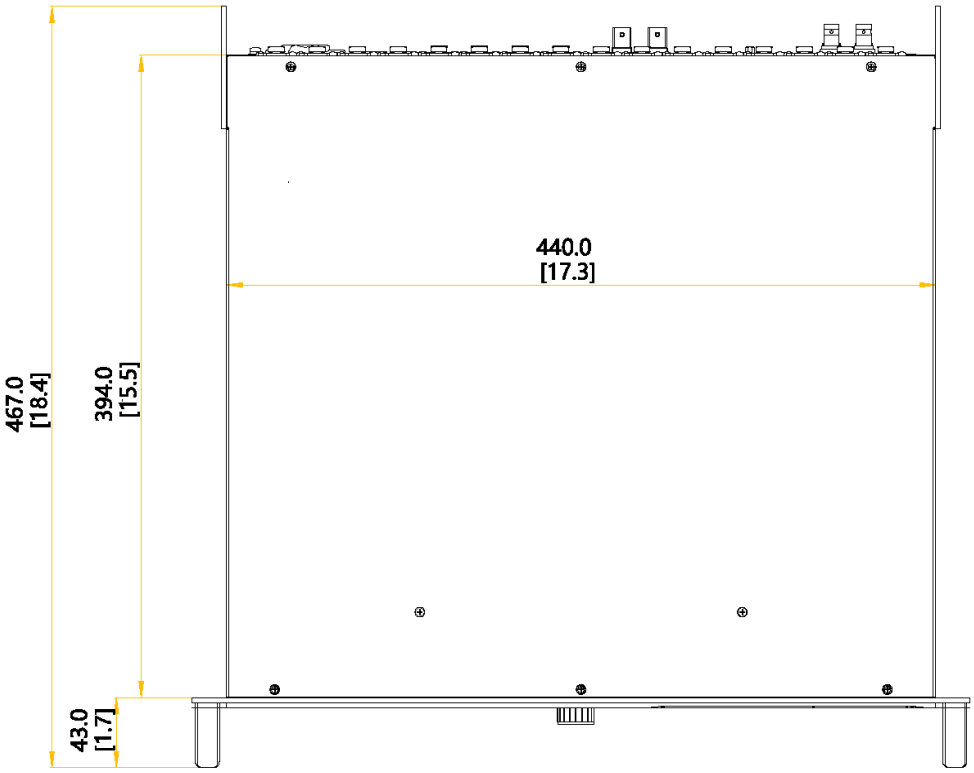

Tolerance: ±0.3 [±0.012] Unit: mm [inch]

Product Specifications

Electrical Specifications	Power input	100-240V~, 50/60Hz
	Max power consumption	95 W
Operating	Temperature	−20°C to +45°C

Environment	Humidity	0% RH to 80% RH, non-condensing
Storage Environment	Temperature	−30°C to +80°C
	Humidity	0% RH to 95% RH, non-condensing
Physical Specifications	Dimensions	482.6 mm × 94.2 mm × 467.0 mm (foot pad included)
	Net weight	7.5 kg
	Gross weight	10.5 kg Note: It is the total weight of the product, accessories, and packing materials packed according to the packing specifications.
Packing Information	Packing box	5950.0 mm × 575.0 mm × 215.0 mm, kraft paper box
	Accessory box	408.0 mm × 294.0 mm × 51.0 mm, white cardboard box
	Accessories	• 1x Power cord • 1x Ethernet cable • 1x HDMI cable • 1x DP cable • 1x Certificate of Approval
IP Rating		IP20 (Please prevent the product from water intrusion and do not wet or wash the product).

The amount of power consumption may vary depending on various factors such as product settings, usage, and environment.

Video Source Specifications

Input	Resolution		Color Space	Sampling	Bit Depth	Integer Frame Rate (Hz)
HDMI 2.0	4K	4096×2160 (Forced)	RGB / YCbCr	4:4:4	12bit	24/25/30
					10bit	24/25/30/48/50
					8bit	24/25/30/48/50/60
			YCbCr	4:2:2	8/10/12bit	
				4:2:0	8/10/12bit	30/48/50/60
		3840×2160	RGB / YCbCr	4:4:4	12bit	24/25/30
					10bit	24/25/30/48/50

Input	Resolution		Color Space	Sampling	Bit Depth	Integer Frame Rate (Hz)
					8bit	24/25/30/48/50/60
			YCbCr	4:2:2	8/10/12bit	
				4:2:0	8/10/12bit	48/50/60
	2K1K	2560×1440	RGB / YCbCr	4:4:4	12bit	24/25/30/48/50/60/75
					10bit	24/25/30/48/50/60/75/100
					8bit	24/25/30/48/50/60/75/100/120
			YCbCr	4:2:2	8/10/12bit	
				4:2:0	8/10/12bit	75/100/120
		1920×1080	RGB / YCbCr	4:4:4	12bit	24/25/30/48/50/60/72/75/100/120/144
					10bit	
					8bit	24/25/30/48/50/60/72/75/100/120/144/240
			YCbCr	4:2:2	8/10/12bit	
				4:2:0	8/10/12bit	120/144/240
DP 1.2	4K	4096×2160 (Forced)	RGB / YCbCr	4:4:4	12bit	24/25/30/48/50
					10bit	24/25/30/48/50/60
					8bit	24/25/30/48/50/60/75
			YCbCr	4:2:2	8/10/12bit	
		3840×2160	RGB / YCbCr	4:4:4	12bit	24/25/30/48/50
					10bit	24/25/30/48/50/60
					8bit	24/25/30/48/50/60/75 (75 Hz needs to be forced)
			YCbCr	4:2:2	8/10/12bit	
	2K1K	2560×1440	RGB / YCbCr	4:4:4	12bit	24/25/30/48/50/60/75/100
					10bit	24/25/30/48/50/60/75/100/120
					8bit	24/25/30/48/50/60/75/100/120/144 (144 Hz needs to be forced)
			YCbCr	4:2:2	8/10/12bit	
		1920×1080	RGB / YCbCr	4:4:4	12bit	24/25/30/48/50/60/75/100/120/144 (144 Hz needs to be forced)
					10bit	
					8bit	24/25/30/48/50/60/75/100/120/144/240 (240 Hz needs to be forced)
			YCbCr	4:2:2	8/10/12bit	

Input	Resolution		Color Space	Sampling	Bit Depth	Integer Frame Rate (Hz)
12G-SDI	4K	4096×2160	YCbCr	4:2:2	10bit	24/25/30/48/50/60
		3840×2160				
	2K1K	2048×1080				
		1920×1080				

Note

- The table above only displays a selection of common resolutions and integer frame rates. Decimal frame rates are also supported, allowing for automatic frame rate adaptation from the highest frame rate of each resolution down to 23.98/29.97/47.95/59.94/71.93/119.88/143.86 Hz.
- When using YCbCr 4:2:0 input, all frame rates need to be forced. Standard graphics cards only support a 4K resolution at 50/60 Hz. Other resolutions and frame rates require a source device that supports this color space and sampling to be forced.

Ethernet Port Load Capacity

When Working with A10s Pro\A8s Pro and Their Derivative Receiving Cards

When working with the A10s Pro\A8s Pro and their derivative receiving cards, the formula of calculating the load capacity per Ethernet port and the detailed parameters are as follows.

- 8bit: Load capacity × 24 × Frame rate < 1000 × 1000 × 1000 × 0.95
- 10bit: Load capacity × 32 × Frame rate < 1000 × 1000 × 1000 × 0.95
- 12bit: Load capacity × 48 × Frame rate < 1000 × 1000 × 1000 × 0.95

Max Load Capacity per Ethernet Port (Pixels)			
Frame Rate / Bit Depth	8bit	10bit	12bit
24 Hz	1,649,306	1,236,979	824,653
25 Hz	1,583,333	1,187,500	791,667
30 Hz	1,319,444	989,583	659,722
50 Hz	791,667	593,750	395,833
60 Hz	659,722	494,792	329,861
120 Hz	329,861	247,396	164,931

Max Load Capacity per Ethernet Port (Pixels)			
Frame Rate / Bit Depth	8bit	10bit	12bit
144 Hz	274,884	206,163	137,442
240 Hz	164,931	123,698	82,465

When Working with Other Armor Series Receiving Cards

When working with other Armor series receiving cards, the formula of calculating the load capacity per Ethernet port and the detailed parameters are as follows:

- 8bit: Load capacity × 24 × Frame rate < 1000 × 1000 × 1000 × 0.95
- 10bit: Load capacity × 48 × Frame rate < 1000 × 1000 × 1000 × 0.95
- 12bit: Load capacity × 48 × Frame rate < 1000 × 1000 × 1000 × 0.95

Max Load Capacity per Ethernet Port (Pixels)			
Frame Rate / Bit Depth	8bit	10bit	12bit
24 Hz	1,649,306	824,653	824,653
25 Hz	1,583,333	791,667	791,667
30 Hz	1,319,444	659,722	659,722
50 Hz	791,667	395,833	395,833
60 Hz	659,722	329,861	329,861
120 Hz	329,861	164,931	164,931
144 Hz	274,884	137,442	137,442
240 Hz	164,931	82,465	82,465

Note

The load capacity of a single Ethernet port can only achieve its maximum when the load width is 128 pixels or more. If the load width is less than that, the load capacity will be reduced accordingly, calculated as (128 - load width) × load height.

Notes and Cautions

Notes for Battery

- The battery is not intended to be replaced.
- Disposal of a battery into fire or a hot oven, or mechanically crushing or cutting of a battery can result in an explosion.
- Leaving a battery in an extremely high temperature surrounding environment can result in an explosion or the leakage of flammable liquid or gas.
- A battery subjected to extremely low air pressure may result in an explosion or the leakage of flammable liquid or gas.

Notes for Installation

When the product needs to be installed on the rack, 4 screws at least M5*12 should be used to fix it. The rack for installation shall bear at least 9kg weight.

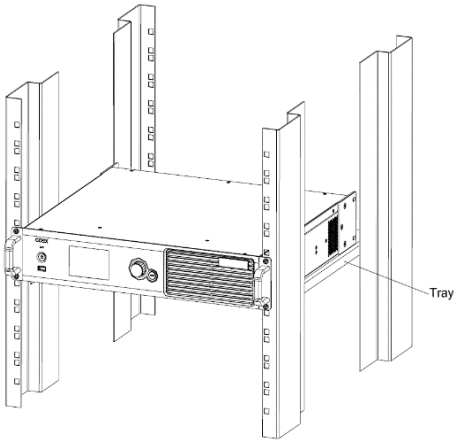

- Elevated Operating Ambient - If installed in a closed or multi-unit rack assembly, the operating ambient temperature of the rack environment may be greater than room ambient. Therefore, consideration should be given to installing the equipment in an environment compatible with the maximum ambient temperature (Tma) specified by the manufacturer.
- Reduced Air Flow – Installation of the equipment in a rack should be such that the amount of air flow required for safe operation of the equipment is not compromised.
- Mechanical Loading – Mounting of the equipment in the rack should be such that a hazardous condition is not achieved due to uneven mechanical loading.
- Circuit Overloading – Consideration should be given to the connection of the equipment to the supply circuit and the effect that overloading of the circuits might have on overcurrent

protection and supply wiring. Appropriate consideration of equipment nameplate ratings should be used when addressing this concern.

- Reliable Earthing – Reliable earthing of rack-mounted equipment should be maintained. Particular attention should be given to supply connections other than direct connections to the branch circuit (e.g. use of power strips).

FCC Caution

- Any changes or modifications not expressly approved by the party responsible for compliance could void the user's authority to operate the equipment.
- This device complies with part 15 of the FCC Rules. Operation is subject to the following two conditions: (1) This device may not cause harmful interference, and (2) this device must accept any interference received, including interference that may cause undesired operation.
- Note: This equipment has been tested and found to comply with the limits for a Class A digital device, pursuant to part 15 of the FCC Rules. These limits are designed to provide reasonable protection against harmful interference when the equipment is operated in a commercial environment. This equipment generates, uses, and can radiate radio frequency energy and, if not installed and used in accordance with the instruction manual, may cause harmful interference to radio communications. Operation of this equipment in a residential area is likely to cause harmful interference in which case the user will be required to correct the interference at his own expense.

Others

- This product can only be placed horizontally. Do not mount vertically or upside-down.
- This is Class A product. In a domestic environment, this product may cause radio interference in which case the user may be required to take adequate measures.

Copyright

Copyright © 2025 Xi'an NovaStar Tech Co., Ltd. All Rights Reserved.

No part of this document may be copied, reproduced, extracted or transmitted in any form or by any means without the prior written consent of Xi'an NovaStar Tech Co., Ltd.

Trademark

NOVASTAR is a trademark of Xi'an NovaStar Tech Co., Ltd.

Statement

Thank you for choosing NovaStar's product. This document is intended to help you understand and use the product. For accuracy and reliability, NovaStar may make improvements and/or changes to this document at any time and without notice. If you experience any problems in use or have any suggestions, please contact us via the contact information given in this document. We will do our best to solve any issues, as well as evaluate and implement any suggestions.

Official website
www.novastar.tech

Technical support
support@novastar.tech