MX20

LED Display Controller

Specifications

Change History

Document Version	Release Date	Description
V1.5.0	2025-09-30	• Supports central control protocol and viewing of device MAC address. • Supports SPDIF audio output.
V1.4.0	2024-06-13	• The **Layer Setting** in the LCD interface of the device has been renamed to **Layer Parameters**. Now, it only shows the parameters without allowing any modifications. • Added information for supported receiving card models.
V1.0.1	2023-07-04	Updated the supported driver ICs for frame rate adaptive.
V1.0.0	2023-06-09	First release

Introduction

The MX20 is an all-in-one LED display controller in the brand-new control system COEX series of Xi'an NovaStar Tech Co., Ltd. (hereinafter referred to as NovaStar). This controller integrates video processing and video control into one box and offers 2x HDMI 1.3, 1x 3G-SDI input connectors, 6x Ethernet output ports, and 2x 10G optical ports. It can also work with the brand-new software VMP (Vision Management Platform) to provide a better operation and control experience.

Certifications

CE, RoHS, FCC, IC, UL, CB

If the product does not have the relevant certifications required by the countries or regions where it is to be sold, please contact NovaStar to confirm or address the problem. Otherwise, the customer shall be responsible for the legal risks caused or NovaStar has the right to claim compensation.

Features

Inputs and Outputs

- 2 types of inputs
  - 2x HDMI 1.3 (with loop through)
  - 1x 3G-SDI (with loop through)
- 10-bit and 8-bit video inputs
- 3 types of outputs
  - 6x Gigabit Ethernet ports, load capacity up to 3.9 million pixels
  - 2x 10G optical ports
  - 1x SPDIF digital audio port
- 3 types of controls
  - 1x Genlock signal input (with loop through)
  - 2x Ethernet control ports
  - 1x Auxiliary port

Advanced Features

- 3 independent layers

  Support up to 3 layers and layer priority adjustment in Z order.
- Image Scaling

  Each layer supports 4 scaling mode: custom, pixel to pixel, snap to canvas, and fill screen.
- 14Ch Color Correction

  Supports precise adjustment to the hue, saturation, and brightness of black and white, and the12 standard colors derived from the three primary colors (RGB).
- Full-Grayscale Calibration

  Work with NovaStar's high-precision calibration system CC3 along with the scientific-grade cameras CC60 and C3200 to generate unique calibration coefficients for each grayscale, ensuring uniformity of each grayscale and dramatically improving the image quality.
- Latency

- Different screens can have different latency settings. The minimum processing latency of the LED display controller is reduced to 0-frame (less than 1 ms), achieving low latency without reducing the load.
- Supports additional latency. Users can choose to add zero to two frames of latency.

- Preset

  For optimal display in various scenarios, users can adjust display parameters such as layers, brightness, color temperature, and gamma ahead of time and save them as presets. Users can save up to 128 customizable presets which can be easily applied or switched with just one click.

- No rectangle restriction

  No rectangle restriction for irregular screens. This means when calculating resolutions, blank pixels do not count towards the total capacity. The used load capacity of Ethernet ports is the sum of the resolutions of all cabinets with load.

- Frame Rate Adaptive

  Automatically adapt to video inputs with different frame rates ranging from 23.98 Hz to 480 Hz, and support the automatic calculation of optimal screen parameters based on the input source's frame rate. This ensures that the brightness deviation of the screen remains within 5% across different frame rates. It also supports precise frame rate adjustment in 0.01 Hz increments.

- Two working modes

  Support the All-In-One Controller and Send-Only Controller working modes.

  - In the Send-Only Controller mode, the latency can be reduced by one frame.
  - In the All-In-One Controller mode, the layer and scaling functions are available.

Device Controls

- VMP software control

  The device can be connected to the VMP software to provide easy and convenient operations and smart device management.

- Supports the SNMP, Art-Net, and central control protocols.

- Cascading control via Ethernet

  The Gigabit Ethernet control ports support TCP/IP protocol and star topology. No switch or router is needed to deploy multiple devices on the same LAN via device cascading as the network switching function is already built in.

- Automated system monitoring and alarm

  Hardware monitoring capabilities that encompass fan speed, module temperatures, voltage levels, and operational status. It automatically detects and reports any device faults or alarm information, ensuring real-time monitoring of the LED screen's operational status.

Table 4-1 Function Limitations

Function	Limitation
Frame Rate Adaptive	To use this function, it is required to pair with the A10s Pro and its derivative receiving cards and specific driver ICs (for detailed IC models, please see the product specifications on the NovaStar website at https://www.novastar.tech/). Additionally, you must use the Cabinet Tool provided by NovaStar to adjust the driver IC parameters for different frame rates, which will generate the required NCP file.
Full Grayscale Calibration	It is required to work with the A10s Pro\A8s Pro receiving card or their derivatives. Users need to use a CC60\C3200 camera to perform full-grayscale calibration.
Calibration Software	COEX V1.5.0 and later versions no longer support the Calcube2.X. Please use the official version of the CC3 calibration software for calibration.
Low Latency	Low Latency cannot be enabled simultaneously with Genlock. Moreover, ilt is recommended to ensure all Ethernet ports load the cabinets vertically and share the same Y coordinate (all set to 0) when Low Latency is enabled.

Table 4-2 Supported receiving card models

Receiving Card Model	Supported
A10s Pro and its series	Yes
A8s Pro and its series	Yes
A8s and its series	Yes
A8s-N	Yes
A7s Plus	Yes
A5s Plus	Yes
B6s	Yes

Appearance

Front Panel

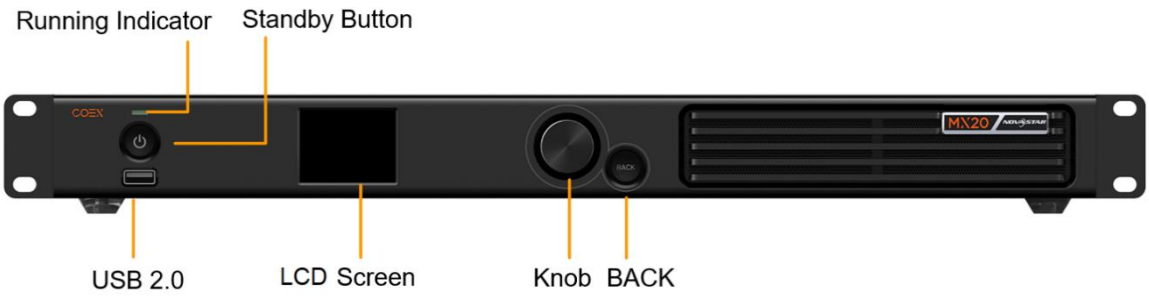

Name	Function
Running indicator	• Solid red: Standby. • Solid blue: The device is being powered on. • Solid green: The device is running normally. • Flashing red: The device is running abnormally.
Standby button	• Press the button to power on or power off the device. • Hold down the button for 5s to 10s to restart the device.
USB 2.0	• Connect to a USB drive only to export the device diagnostic result. • Only the NTFS and FAT32 file systems are supported. Others are not supported.
LCD Screen	A 2.0-inch screen to display the device status, menus, submenus and messages for parameter settings.
Knob	• On the home screen, press the knob to enter the main menu screen. • On the main menu screen, rotate the knob to select a menu item or adjust the parameter value. Press the knob to confirm the operation. • Hold down the knob and **BACK** button simultaneously for 5s or longer to lock or unlock the buttons and screen.
BACK	Go back to the previous menu or cancel the current operation.

Rear Panel

Inputs			
Type	Qty	Description	
HDMI 1.3 IN	2	Resolution	Max resolution: 1920×1200@60Hz Min resolution: 800×600@60Hz
		Max width/height (Forced)	Max width: 3840 (3840×600@60Hz) Max height: 2560 (800×2560@60Hz)
		Frame rates	23.98/24/25/29.97/30/47.95/48/50/59.94/60/71.93/72/75/100/119.88/120/143.86/144 Hz
		EDID management	Support standard resolutions, up to 1920×1080@60Hz. Support custom input resolutions.
		HDCP	HDCP 1.4 compliant, backwards compatible with HDCP 1.3.
		Interlaced signal inputs	Not supported.
3G-SDI IN	1	Standards	Support ST-424 (3G) and ST-292 (HD) standard video inputs. Support 3G-Level A.
		Resolution	Max resolution: 1920×1080@60Hz
		Frame rates	23.98/24/25/29.97/30/47.95/48/50/59.94/60 Hz
		Interlaced signal inputs	Support MQ level deinterlacing. The interlaced signals will be automatically detected and converted to progressive signals.
Outputs			
Type	Qty	Description	
1–6	6	Gigabit Ethernet output ports. Support hot backup between Ethernet ports. • Max device load capacity: 3.9 million pixels • Max output width/height: 4,096 pixels • The maximum load capacity per Ethernet port is as follows. For details, refer to Ethernet Port Load Capacity: – 8bit@60Hz: 659,722 pixels – 10bit@60Hz: 329,861 pixels. When the controller works with the A10s Pro receiving card, the capacity can be up to 494,791 pixels. Note The load capacity of a single Ethernet port can only achieve its maximum when	

Inputs		
Type	Qty	Description
		the load width is 128 pixels or more. If the load width is less than that, the load capacity will be reduced accordingly, calculated as (128 - load width) × load height. When using the Ethernet port, pair it with a CAT5E cable for a maximum length of 100 meters.
OPT 1–2	2	10G optical output ports with a transmission rate of 10 Gbps. • OPT 1 transmits the data of Ethernet ports 1 to 6. • OPT 2 is the copy channel of OPT 1. Note The product doesn't include an optical module by default. If you need one, it's recommended to choose a compatible NovaStar product.
HDMI 1.3 LOOP	2	HDMI loop through. Up to 8 devices can be cabled in one loop.
3G-SDI LOOP	1	SDI loop through. Up to 8 devices can be cabled in one loop.
SPDIF OUT	1	Digital audio output connector allows for using the HDMI 1.3 input source as the audio output.
Controls		
Type	Qty	Description
ETHERNET	2	Gigabit Ethernet control ports. Support TCP/IP protocol and star connection. They have the same functions without priority and order, and can be connected to VMP software and central control devices. No switch or router is needed to deploy multiple devices on the same LAN via device cascading as the network switching function is already built in. Up to 20 MX20 can be cascaded.
GENLOCK	1	A pair of Genlock signal connectors. Support Bi-Level, Tri-Level, and Blackburst. • IN: Accept the sync signal • LOOP: Loop the sync signal The Genlock input signal supports a frame rate range from 23.98 Hz to 60 Hz. For standard Genlock signal generators, up to 20 MX20 can be cascaded.
AUX	1	An auxiliary connector for connecting to central control devices (RS232).

Inputs		
Type	Qty	Description
Power		
100-240V~, 50/60Hz	1	An AC power input connector and switch.

Dimensions

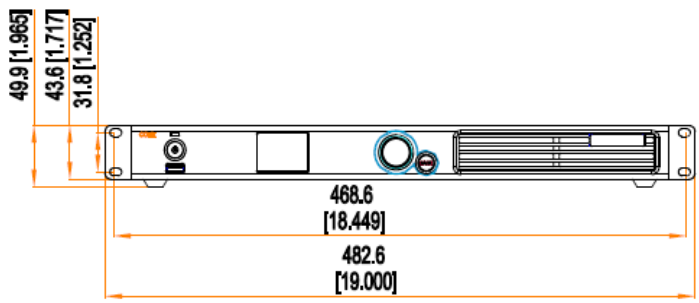

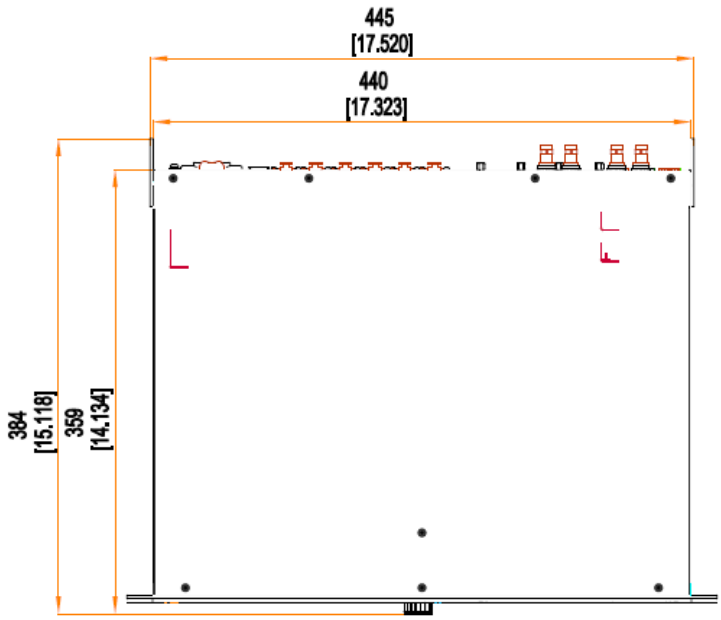

Tolerance: ±0.3 [±0.012] Unit: mm [inch]

Product Specifications

Electrical	Power input	100-240V~, 50/60Hz

Specifications	Maximum power consumption	50 W
Operating Environment	Temperature	−20°C to +45°C
	Humidity	0% RH to 80% RH, non-condensing
Storage Environment	Temperature	−30°C to +80°C
	Humidity	0% RH to 95% RH, non-condensing
Physical Specifications	Dimensions	482.6 mm × 49.9 mm × 384.0 mm
	Net weight	4.5 kg
	Gross weight	8.1 kg Note: It is the total weight of the product, accessories, and packing materials packed according to the packing specifications.
Packing Information	Packing box	590.0 mm × 520.0 mm × 180.0 mm, kraft paper box
	Accessory box	408.0 mm × 294.0 mm × 51.0 mm, white cardboard box
	Accessories	• 1x Power cord • 1x Ethernet cable • 1x HDMI cable • 1x Certificate of Approval
IP Rating		IP20 (Please prevent the product from water intrusion and do not wet or wash the product).

The amount of power consumption may vary depending on various factors such as product settings, usage, and environment.

Video Source Specifications

Input	Resolution		Color Space	Sampling	Bit Depth	Integer Frame Rate (Hz)
HDMI 1.3	2K1K	2560×1440	RGB / YCbCr	4:4:4	10bit	24/25/30
					8bit	
			YCbCr	4:2:2	8/10bit	
		1920×1080	RGB /	4:4:4	10bit	24/25/30/48/50

Input	Resolution		Color Space	Sampling	Bit Depth	Integer Frame Rate (Hz)
			YCbCr		8bit	24/25/30/48/50/60
			YCbCr	4:2:2	8/10bit	
3G-SDI	2K1K	2048×1080	YCbCr	4:2:2	10bit	24/25/30/48/50/60
		1920×1080				

Note

The table above only displays a selection of common resolutions and integer frame rates. Decimal frame rates are also supported, allowing for automatic frame rate adaptation from the highest frame rate of each resolution down to 23.98/29.97/47.95/59.94/71.93/119.88/143.86 Hz.

Ethernet Port Load Capacity

When Working with A10s Pro\A8s Pro and Their Derivative Receiving Cards

When working with the A10s Pro\A8s Pro and their derivative receiving cards, the formula of calculating the load capacity per Ethernet port and the detailed parameters are as follows.

- 8bit: Load capacity × 24 × Frame rate < 1000 × 1000 × 1000 × 0.95
- 10bit: Load capacity × 32 × Frame rate < 1000 × 1000 × 1000 × 0.95

Max Load Capacity per Ethernet Port (Pixels)		
Frame Rate / Bit Depth	8bit	10bit
24 Hz	1,649,306	1,236,979
25 Hz	1,583,333	1,187,500
30 Hz	1,319,444	989,583
50 Hz	791,667	593,750
60 Hz	659,722	494,792
120 Hz	329,861	247,396
144 Hz	274,884	206,163

When Working with Other Armor Series Receiving Cards

When working with other Armor series receiving cards, the formula of calculating the load capacity per Ethernet port and the detailed parameters are as follows:

- 8bit: Load capacity × 24 × Frame rate < 1000 × 1000 × 1000 × 0.95
- 10bit: Load capacity × 48 × Frame rate < 1000 × 1000 × 1000 × 0.95

Max Load Capacity per Ethernet Port (Pixels)		
Frame Rate / Bit Depth	8bit	10bit
24 Hz	1,649,306	824,653
25 Hz	1,583,333	791,667
30 Hz	1,319,444	659,722
50 Hz	791,667	395,833
60 Hz	659,722	329,861
120 Hz	329,861	164,931
144 Hz	274,884	137,442

Note

The load capacity of a single Ethernet port can only achieve its maximum when the load width is 128 pixels or more. If the load width is less than that, the load capacity will be reduced accordingly, calculated as (128 - load width) × load height.

Notes and Cautions

Notes for Battery

- The battery is not intended to be replaced.
- Disposal of a battery into fire or a hot oven, or mechanically crushing or cutting of a battery can result in an explosion.
- Leaving a battery in an extremely high temperature surrounding environment can result in an explosion or the leakage of flammable liquid or gas.
- A battery subjected to extremely low air pressure may result in an explosion or the leakage of flammable liquid or gas.

Notes for Installation

When the product needs to be installed on the rack, 4 screws at least M5*12 should be used to fix it. The rack for installation shall bear at least 9kg weight.

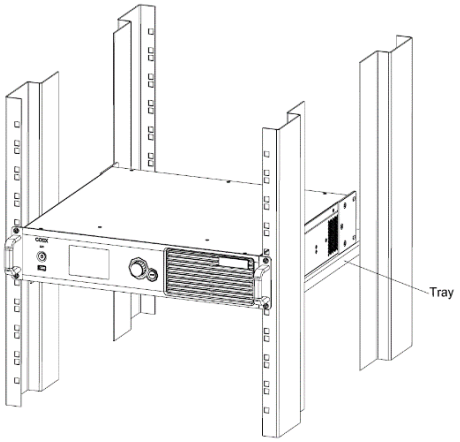

- Elevated Operating Ambient - If installed in a closed or multi-unit rack assembly, the operating ambient temperature of the rack environment may be greater than room ambient. Therefore, consideration should be given to installing the equipment in an environment compatible with the maximum ambient temperature (Tma) specified by the manufacturer.
- Reduced Air Flow – Installation of the equipment in a rack should be such that the amount of air flow required for safe operation of the equipment is not compromised.
- Mechanical Loading – Mounting of the equipment in the rack should be such that a hazardous condition is not achieved due to uneven mechanical loading.
- Circuit Overloading – Consideration should be given to the connection of the equipment to the supply circuit and the effect that overloading of the circuits might have on overcurrent protection and supply wiring. Appropriate consideration of equipment nameplate ratings should be used when addressing this concern.
- Reliable Earthing – Reliable earthing of rack-mounted equipment should be maintained. Particular attention should be given to supply connections other than direct connections to the branch circuit (e.g. use of power strips).

FCC Caution

- Any changes or modifications not expressly approved by the party responsible for compliance could void the user's authority to operate the equipment.
- This device complies with part 15 of the FCC Rules. Operation is subject to the following two conditions: (1) This device may not cause harmful interference, and (2) this device must accept any interference received, including interference that may cause undesired operation.

- Note: This equipment has been tested and found to comply with the limits for a Class A digital device, pursuant to part 15 of the FCC Rules. These limits are designed to provide reasonable protection against harmful interference when the equipment is operated in a commercial environment. This equipment generates, uses, and can radiate radio frequency energy and, if not installed and used in accordance with the instruction manual, may cause harmful interference to radio communications. Operation of this equipment in a residential area is likely to cause harmful interference in which case the user will be required to correct the interference at his own expense.

Others

- This product can only be placed horizontally. Do not mount vertically or upside-down.
- This is Class A product. In a domestic environment, this product may cause radio interference in which case the user may be required to take adequate measures.

Copyright

Copyright © 2025 Xi'an NovaStar Tech Co., Ltd. All Rights Reserved.

No part of this document may be copied, reproduced, extracted or transmitted in any form or by any means without the prior written consent of Xi'an NovaStar Tech Co., Ltd.

Trademark

NOVASTAR is a trademark of Xi'an NovaStar Tech Co., Ltd.

Statement

Thank you for choosing NovaStar's product. This document is intended to help you understand and use the product. For accuracy and reliability, NovaStar may make improvements and/or changes to this document at any time and without notice. If you experience any problems in use or have any suggestions, please contact us via the contact information given in this document. We will do our best to solve any issues, as well as evaluate and implement any suggestions.

Official website
www.novastar.tech

Technical support
support@novastar.tech